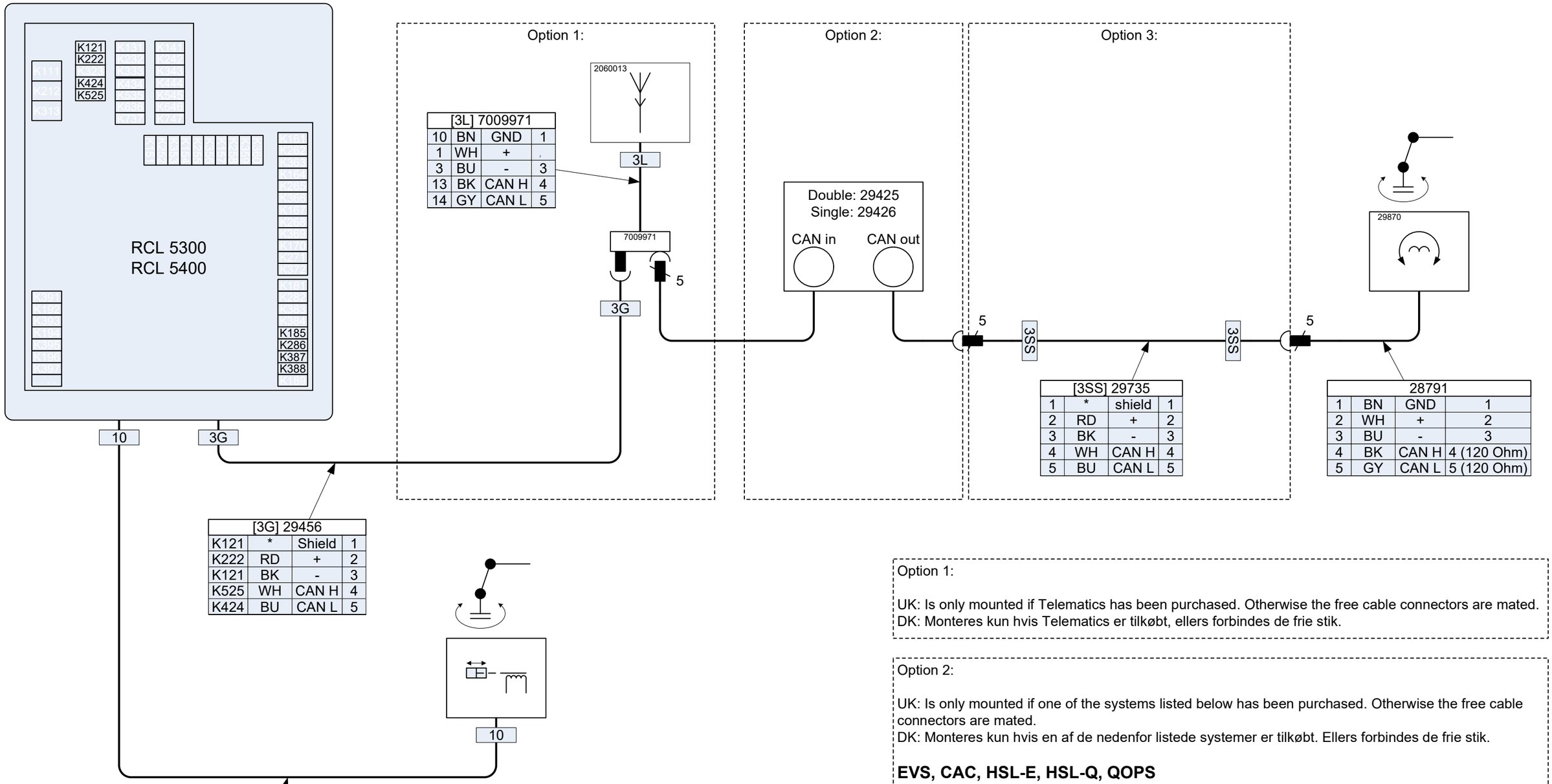

[3L] 7009971			
10	BN	GND	1
1	WH	+	
3	BU	-	3
13	BK	CAN H	4
14	GY	CAN L	5

[3SS] 29735			
1	*	shield	1
2	RD	+	2
3	BK	-	3
4	WH	CAN H	4
5	BU	CAN L	5

28791			
1	BN	GND	1
2	WH	+	2
3	BU	-	3
4	BK	CAN H	4 (120 Ohm)
5	GY	CAN L	5 (120 Ohm)

[3G] 29456			
K121	*	Shield	1
K222	RD	+	2
K121	BK	-	3
K525	WH	CAN H	4
K424	BU	CAN L	5

[10] 28117			
K185	BU	-	3
K286	BN	+	1
K387	BK	Signal	4
K388	WH	Signal	2

Option 1:

UK: Is only mounted if Telematics has been purchased. Otherwise the free cable connectors are mated.
DK: Monteres kun hvis Telematics er tilkøbt, ellers forbindes de frie stik.

Option 2:

UK: Is only mounted if one of the systems listed below has been purchased. Otherwise the free cable connectors are mated.
DK: Monteres kun hvis en af de nedenfor listede systemer er tilkøbt. Ellers forbindes de frie stik.

EVS, CAC, HSL-E, HSL-Q, QOPS

Option 3:

UK: The extension cable is only mounted if option 1 or option 2 is valid. Otherwise cable 3G is connected to the slew sensor..
DK: Forlængerkablet monteres kun hvis option 1 eller option 2 er gældende. Ellers tilsluttes kabel 3G til svingsensoren

Revision		
Nr.	Date	Sign.
A	26.05.2021	BWK

Product: RCL 5400

Part: Slew sensor MCS

Date: 26.05.2021
Sign.: BWK
Drawing size: A3
Replacing
Drawing nr.: 70 21 534 02
Rep. by

Højbjerg Maskinfabrik a/s
Oddervej 200 - DK-8270 Højbjerg